FENDER "BASSMAN" SCHEMATIC P/B
MODEL 6G6-A

A-FB

NOTICE
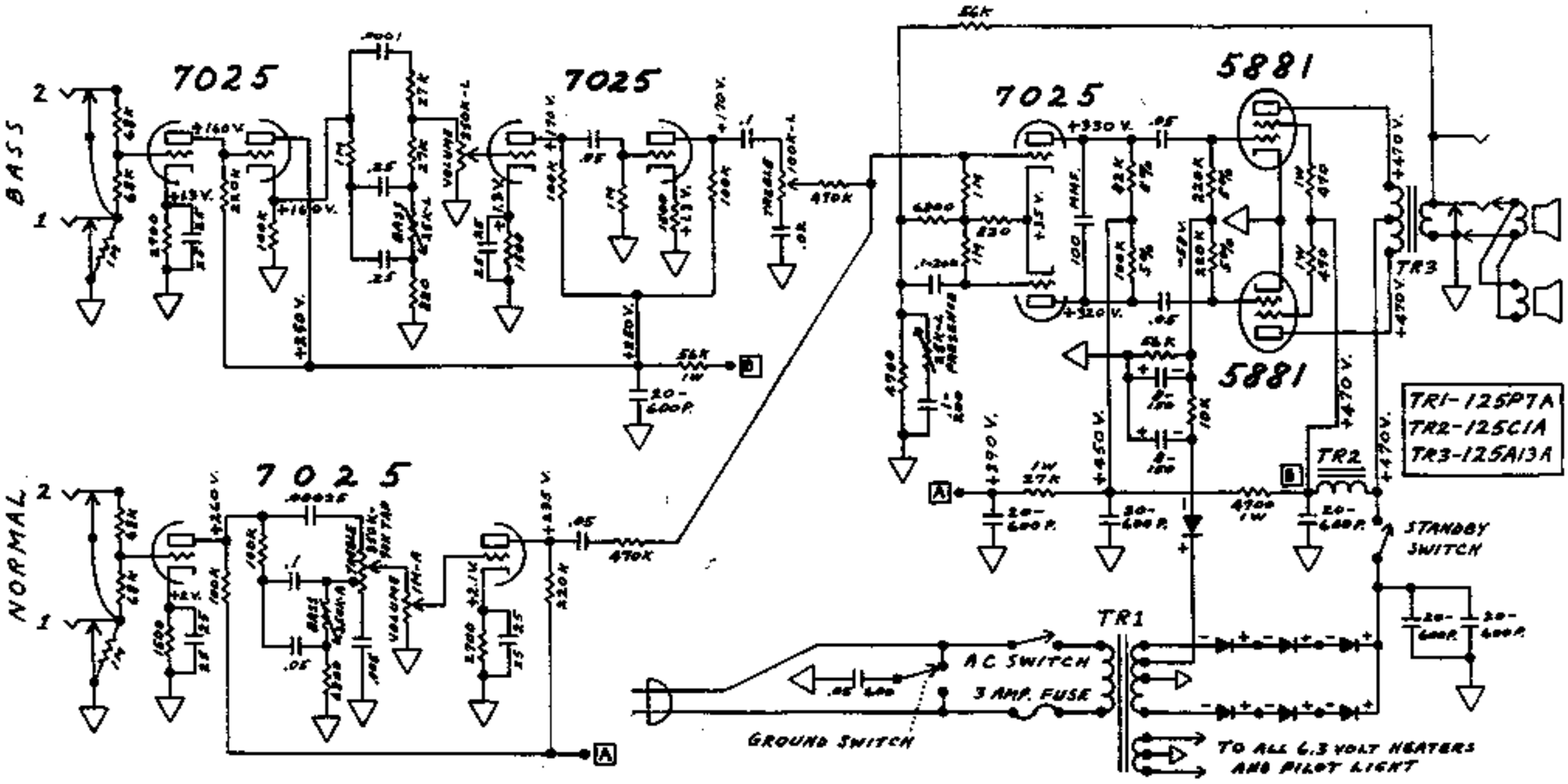
1- VOLTAGES READ TO GROUND WITH ELECTRONIC VOLTMETER. VALUES SHOWN + OR - 20%
2- ALL RESISTORS 1/2 WATT, 10% TOLERANCE UNLESS SPECIFIED.
3- ALL CAPACITORS AT LEAST 400 VOLT RATING UNLESS SPECIFIED.